CRYO

Operation Instructions

CRYOCOOL-LT (& G2B)

CRYO Industries of America, Inc.
11124 S. Willow St. • Manchester, NH 03103
Tel: (603) 621-9957 • Fax: (603) 621-9960
E-mail: cryo@cryoindustries.com

CLOSED CYCLE
CRYO COOLER
CRYOCOOL-LT (Low Temp) & CRYOCOOL-G2B

Introduction

CRYO's closed cycle '**CRYOCOOL-LT (LowTemp) & CRYOCOOL-G2b systems** provide a continuous cold helium or nitrogen gas stream – without using liquid helium or nitrogen.

Helium or Nitrogen gas flows into the refrigerator. The refrigerator cools the gas. The cold gas transverses the transfer line and exits at the nozzle.

The CRYOCOOLS feature **never-ice technology** - no shield gas is used! The never-ice warm tip maintains an ice-free environment at low temperatures; the system remains ice free (inside and out).

The single stream design allows the system to work well with helium gas as well as nitrogen gas. There is no shield gas to cause turbulence in the very lightweight helium gas stream. The never-ice external tip is temperature controlled to prevent ice formation.

A temperature controller is attached to a temperature sensor in the gas stream, located just before the gas stream exit in the nozzle. The controller continuously displays the gas stream temperature. A heater in the gas stream can be used to control the temperature or the gas stream.

The temperature control simultaneously displays: 1. 1st cooling stage of the refrigerator, 2. Gas stream temperature, 3. 2nd cooling stage of the refrigerator and 4. De-icing tip.

Liquid cryogens are not used. The 'closed cycle refrigerator' provides the cooling needed.

Nitrogen gas is supplied to the CRYO cooler from a nitrogen gas generator, compressed gas bottle or in-house supply. Helium gas is typically supplied via a compressed gas bottle.

The temperature controller monitors and controls the gas stream, external tip, refrigerator 2nd stage and the refrigerator 1st stage.

A digital gas flow controller displays the flow rate (slm) and controls the input gas flow rate automatically.

CRYO Industries of America, Inc.
11124 South Willow St. • Manchester, NH 03103
Tel: (603) 621-9957 • www.cryoindustries.com

→ **Unpacking**

Unpack the consignment and inspect for any possible damage. If damage is suspected, report this immediately to the freight carrier and to CRYO. Check the packing list for all listed items, and if any is missing, report this immediately to CRYO.

Main Component Parts

1. Refrigerator/cryostat and stainless steel flexible transfer line
2. Compressor
3. High precision PID temperature controller (model 336)
4. 30V digital DC power supply
5. 24 V DC power supply
6. Gas Flow Controller
7. CRYO stream nozzle stand (optional)

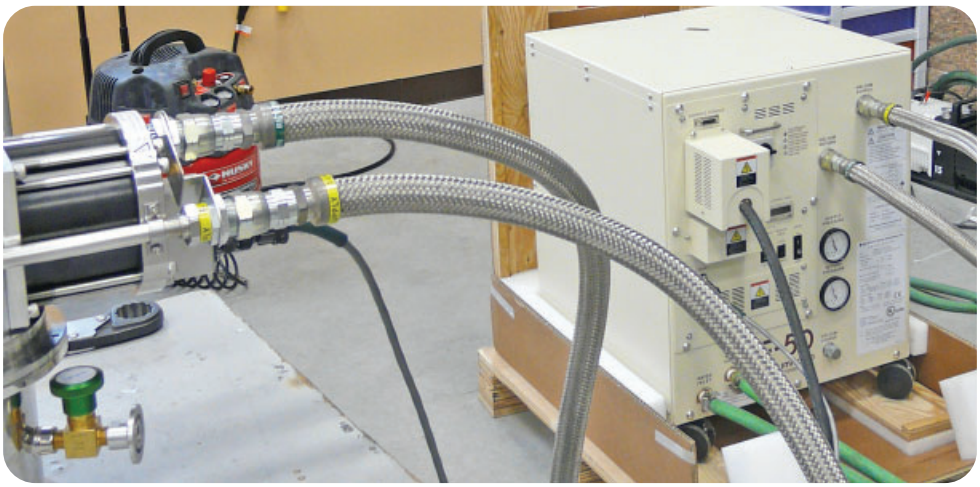

Cryocool Coldhead connected to compressor

→ **Refrigerator**

A 2-stage GM (Gifford McMahon) refrigerator is the cooling source. The refrigerator has two cooling stages. The gas stream is cooled first by the 1st stage and then by the second stage. The result is reliable refrigeration at cryogenic temperatures for long continuous periods - without using cryogenic liquids.

→ **CONSULT THE SEPARATE REFRIGERATOR MANUAL ENCLOSED FOR THE REQUIRED REFRIGERATOR SETUP AND CONNECTIONS.**

Connect the high pressure flex hose labeled 'supply' to the matching connections on the compressor and CRYOCOOL.

Connect the flex hose labeled 'return' to the matching connections on the compressor and CRYOCOOL.

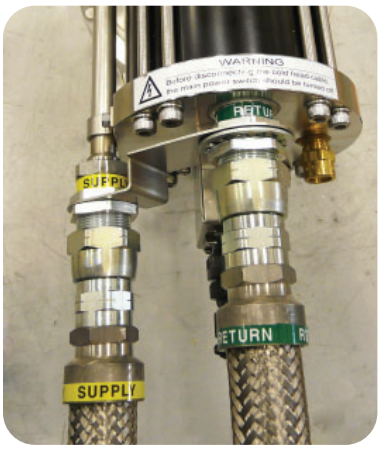

Cryocool Coldhead flex hose connections

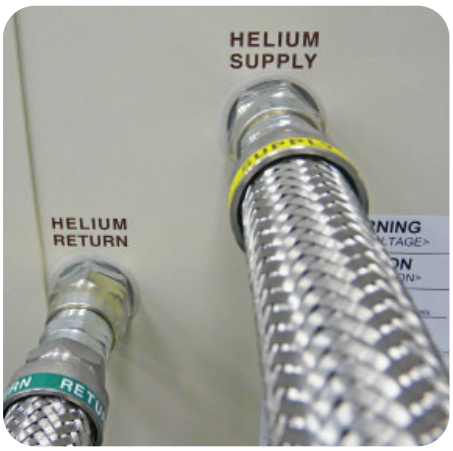

Cryocool F-50 flex hose connections

CRYO Industries of America, Inc.
11124 South Willow St. • Manchester, NH 03103
Tel: (603) 621-9957 • www.cryoindustries.com

Tip Heater

To maintain an ice-free environment at low temperatures, the external tip heater maintains a dry tip and ice-free sample. For proper operation, it is best to understand how the tip heater works.

The old classic style system uses a dual gas stream, cold inner flow surrounded by warm outer shield flow. It is generally thought that the outer stream is needed for ice prevention at the crystal. In reality, the main functions of the outer stream are to:

1. Prevent frost at the outlet
2. Transfer heat to the crystal mount.

Heating the nozzle tip performs the same function as the gas shield flow in preventing frost at the outlet, *without the complexity of supplying, maintaining and drying shield gas*. In addition, superior helium gas operation is obtained because there is not shield gas to disturb the helium gas flow. The heated nozzle will remain frost-free and does not significantly heat the cold gas flow. Since the cold gas stream is laminar, virtually no water or CO_2 will cross the stream and deposit on the crystal.

Without shield gas, one must be alert to the design of the crystal mount. Because the outer stream is not there to supply heat to the crystal mount, some other means must be made available; otherwise, some frost may form on the crystal mount. One solution is to use a mounting pin made from copper (good heat conductor). Only about 1 mm at the tip of the mounting pin should be inside the cold stream. The pin should be tapered at the tip. The glass fiber (non-heat conductor) that holds the sample is joined into the tip. With a properly setup mount, there is no frost formation at or near the crystal - even in the most humid environment.

Do not mount the pin perpendicular to the stream. A 90 degree orientation of the stream relative to the mounting fiber will not work correctly. There should be at least a 20 degree angle, so that the crystal end of the mounting fiber points into the stream. The stream should never run in a direction that allows gas to flow along the fiber, in a direction from the mounting pin to the crystal. A 90 degree orientation still allows room air to flow onto the fiber. A 20 degree angle, or larger, will prevent this flow.

The flow rate can be changed as needed. Eliminating the shield flow, allows for true variable 'cold' flow. With older type shield gas systems, cold flow rate changes require adjustments to the shield flow, as flows must always be matched. In a shield gas flow system, failure to match the nozzle exit velocities between the inner and shield flow can result in turbulence and icing.

The CRYOCOOL systems eliminate the complexity and difficulties in trying rematch shield gas and inner flow velocities when instituting a flow rate change.

The extremely low mass of helium, requires eliminating shield gases, which can easily disturb the flow of the helium gas, causing turbulence (icing) and higher low end temperature.

CRYO Industries of America, Inc.
11124 South Willow St. • Manchester, NH 03103
Tel: (603) 621-9957 • www.cryoindustries.com

IMPORTANT

Assure that the gas supply has the supplied safety pressure relief installed.

Pressure relief maximum should be less than 0.7 atm.

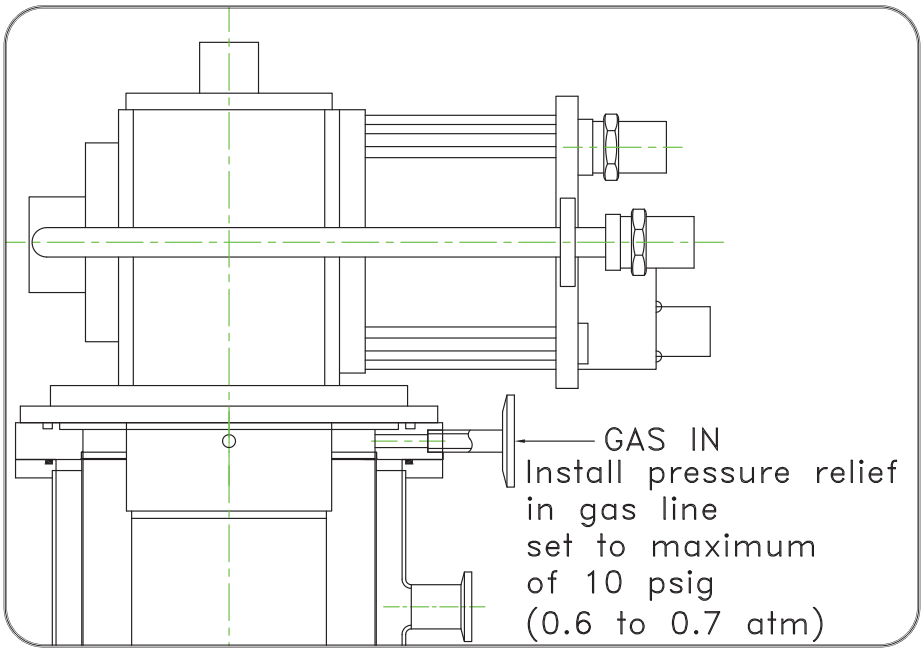

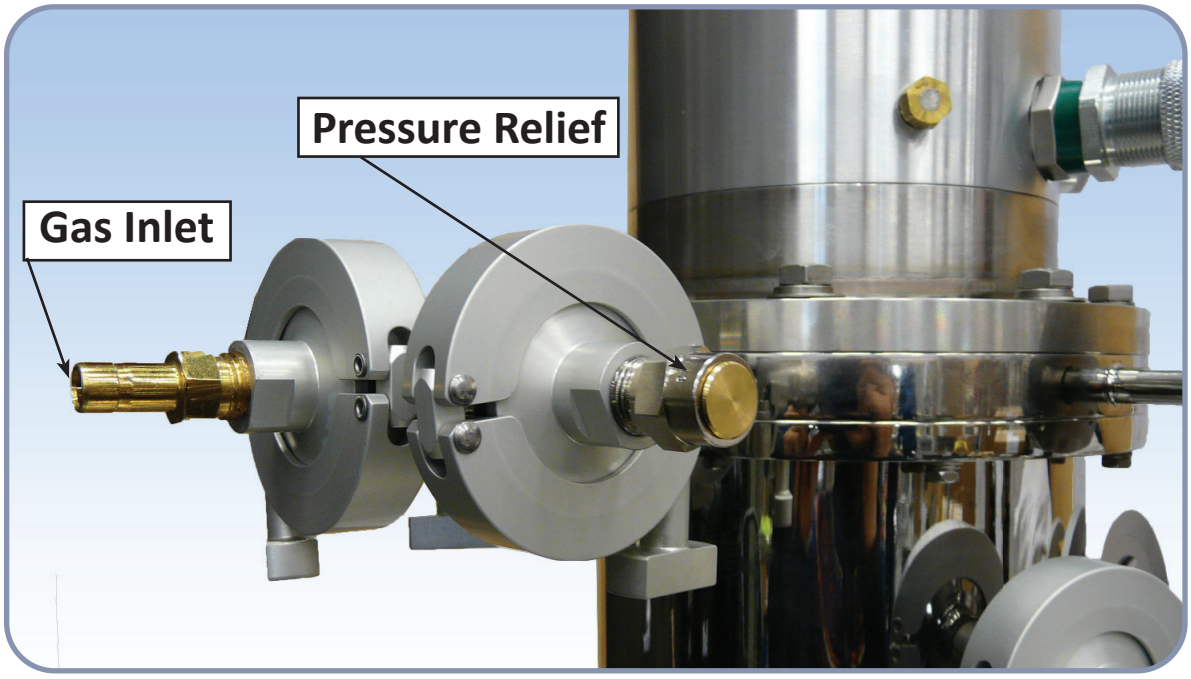

CRYO Industries of America, Inc.
11124 South Willow St. • Manchester, NH 03103
Tel: (603) 621-9957 • www.cryoindustries.com

Temperature Sensors

Four Temperature sensors installed are:

Channel A
Location: 1st refrigerator stage
Type: Platinum
Curve: PT-100

Channel B
Location: Nozzle – gas stream
Type: Silicon diode
Curve: DT670

Channel C
Location: 2nd refrigerator stage
Type: Silicon diode
Curve: DT670

Channel D
Location: External never-ice tip
Type: Platinum
Curve: PT-100

CRYO Industries of America, Inc.
11124 South Willow St. • Manchester, NH 03103
Tel: (603) 621-9957 • www.cryoindustries.com

Temperature Control

Each temperature sensor has an associated heater attached. The heater can be used to control the temperature at the temperature sensor location.

Channel A
Controls 1st Refrigerator stage
Heater = 25 Ohms
(Two 50 Ohm heaters wired in external cable to be in parallel, i.e. 25 Ohms)
Powered by controller 'Output 1' [100 Watts]
Controlled by controller 'Loop 1'

Channel B
Controls gas stream temperature
Heater = 25 Ohms
Powered by controller 'Output 2'
[recommended setting: maximum output 25 Watts below 100 K, 50 Watts > 100K]
Controlled by controller 'Loop 2'

Channel C
Controls 2nd Refrigerator stage
Heater = 12.5 Ohms [2-25 Ohm heaters in parallel]
PID control 'Output 3'
Powered by external 30 V DC Power Supply

Channel D
Controls external tip
Heater = ~25 Ohms
Relay controlled 'Output 4'
Powered by external 29.5 V DC power supply

CRYO Industries of America, Inc.
11124 South Willow St. • Manchester, NH 03103
Tel: (603) 621-9957 • www.cryoindustries.com

Cable Connections

Three bundles of cable come for connecting equipment.

Temperature Controller Model 336 (rear view of temperature input connectors)

Bundle 1

1. Wire Input B/Gas Stream: Connects from INPUT B (on back of temperature controller) to 10-pin feedthrough on Gas Stream Nozzle

2. Wire Gas Stream heater to Output 2, 50 Ohms, 50 Watt, limit preset to 25 Watts, to change use controller output setup button. Connects to rear temperature controller label Output 2.

Bundle 2

1. Wire Input C/2nd Stage connects from INPUT C (on back of temperature controller) to 19-pin feedthrough on cryostat

2. Red banana plug/1st Stage/100 Watts 25 Ohms connects to Output 1 Heater on rear of temperature controller.

3. Single Red and Black Banana wires (which are wired together plug into the black and

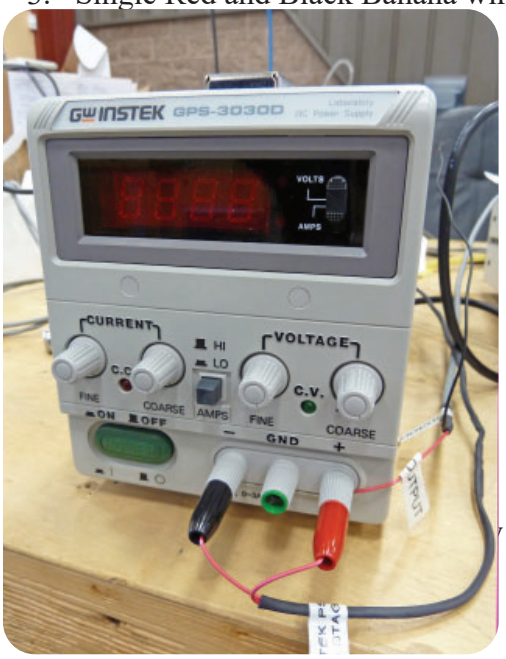

Gw Instek GPS-303D Power Supply

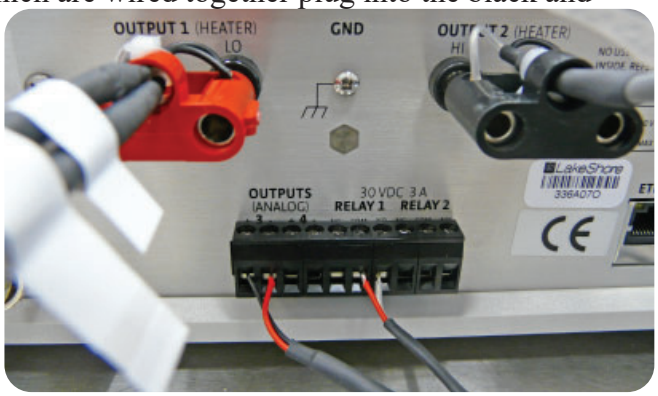

Temperature Controller Model 336 (rear view of heater output & relay box)

on the front of the Gw Intstek GPS-3030D Power

CRYO Industries of America, Inc.
11124 South Willow St. • Manchester, NH 03103
Tel: (603) 621-9957 • www.cryoindustries.com

Bundle 3

1. Wire Input D/Tip is connected to INPUT D in rear of temperature controller
2. Black relay box is plugged into rear of temperature controller
3. 24 Volt power that splits out of black relay box wired into the 24 V power supply
4. Also from the relay box wire a silver connector (labeled flow controller) is connected to the flow controller
5. Grey connector cable is wired to external tip
6. Black Slave Input SE wire is wired into Slave input on back of Gw Instek Power Supply
7. Red 3030 PS+ is wired to front of Gw Instek power supply with red banana plug

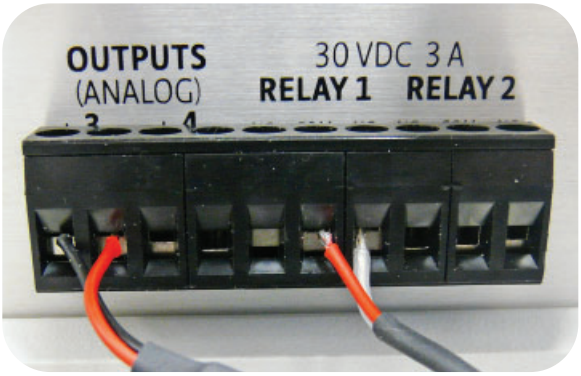

Relay box plugged into temperature controller (rear view)

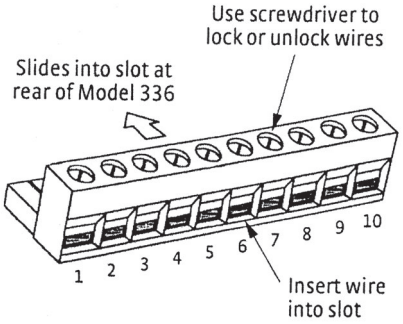

Terminal block for relays and Output 3 and 4

Gw Instek Power Supply rear view

CRYO Industries of America, Inc.
11124 South Willow St. • Manchester, NH 03103
Tel: (603) 621-9957 • www.cryoindustries.com

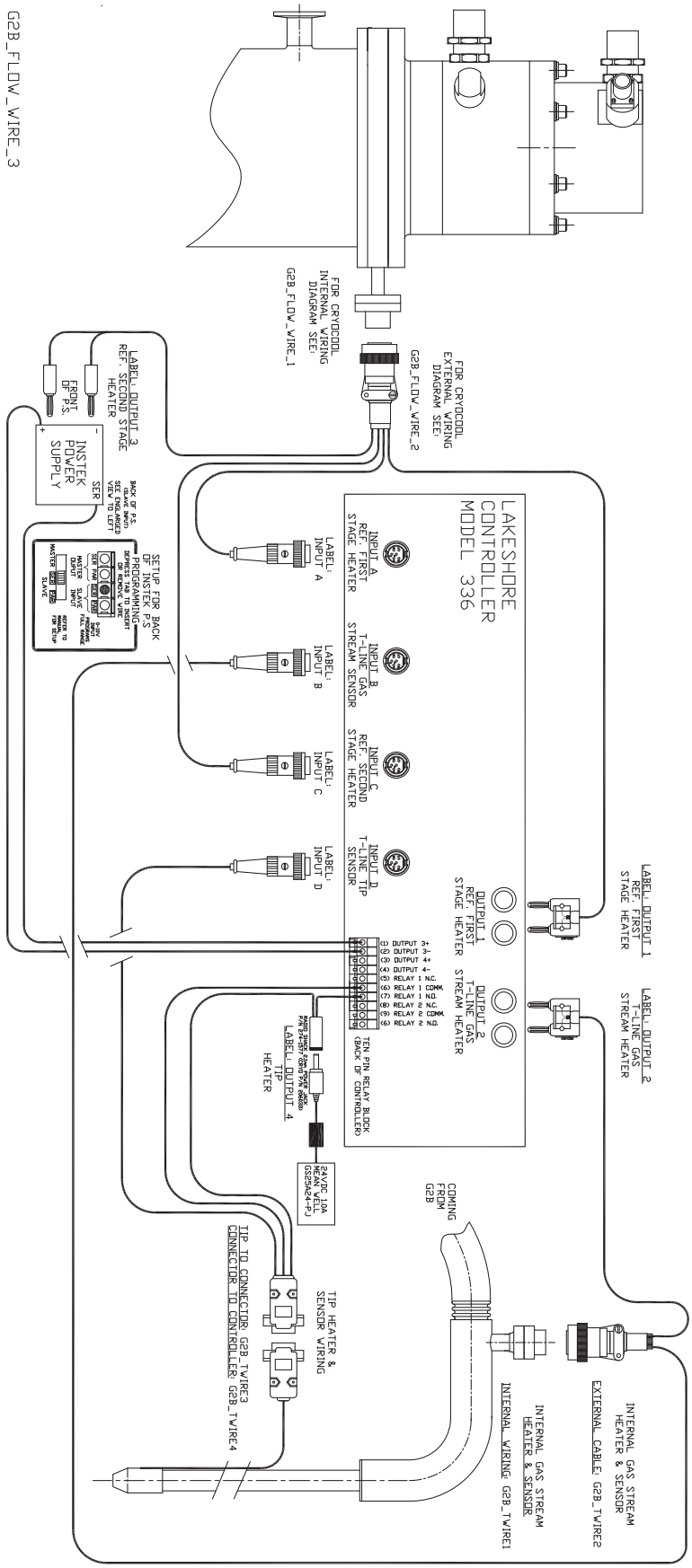

CRYO Industries of America, Inc.
11124 South Willow St. • Manchester, NH 03103
Tel: (603) 621-9957 • www.cryoindustries.com

Tip

→ External Tip Temperature Sensor And Control

A platinum temperature sensor has been installed on the nozzle 'tip'.
The temperature sensor connects to the controller channel B.

The tip is controlled by the 'low alarm' setting of the temperature controller. When the tip temperature is below the setpoint temperature, the corresponding relay on the back of the temperature controller is energized – powering the tip heater. The normal set point temperature for tip control is 300 K.

The temperature controller provides visual indication of the tip temperature and automatically adjusts the de-icing heater.

Setpoint and alarm setting parameters are accessed through the controller 'alarm setup'. The corresponding channel selected should be 'D'.
Press Button labeled ' Alarm'
Select 'D: TIP - *Note names displayed have been labeled as such using the controller name input feature*.
Select: Alarm: ON
Low Setpoint: 300 K
High Setpoint: 500 K
Latching: Off
Deadband: 0 K
Audible: Off
Visible: Off

Set relay 1 to correspond to Channel D

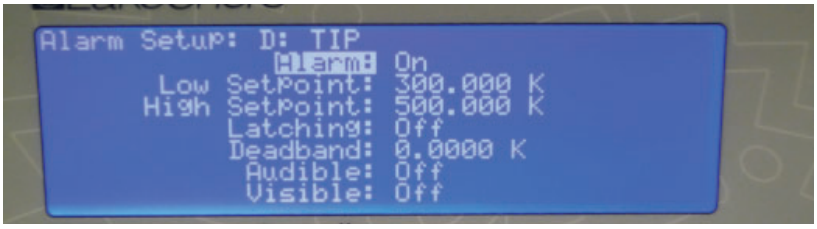

CRYO Industries of America, Inc.
11124 South Willow St. • Manchester, NH 03103
Tel: (603) 621-9957 • www.cryoindustries.com

Press the relay button
Select Relay 1

Set
Mode: Alarm
Alarm Input: D: TIP (Channel D)
Alarm to Follow: Low

Leave Relay 2 to OFF

Channel D will display the temperature of the outside tip. Controlling the tip temperature at approximately 300 K will prevent ice from forming. A heater is installed on the plastic tip and is used to set the tip

temperature. 'Low Alarm' of the temperature controller is used energize the heater using the 24 V DC Power Supply and Relay 1.

CRYO Industries of America, Inc.
11124 South Willow St. • Manchester, NH 03103
Tel: (603) 621-9957 • www.cryoindustries.com

→ Gas Stream Temperature Control

Channel B displays the temperature of the gas stream.
'Output 2' controls the temperature of the gas stream.

A heater installed inside the nozzle can be used to set the gas stream temperature. Output 2 of the temperature controller is used to control the gas stream temperature.

The maximum 'output 2' power is 50 Watts; the resistance of the nozzle heater is approximately 25 Ohms. The power limit is preset to 25 Watts, which can be changed using the 'output setup' button on the temperature controller.

Channel B displays the temperature of the gas stream.

Press the corresponding 'B' button on the controller.
Press 'setpoint' and enter the desired value.

Select the heater output range.
Note: the heater will not energize if the heater output range is not set.

Typically, the PID is set to 'manual PID', with P=100, I = 20 and D=0. The P(gain) is the important controller setting and values are usually lower at colder temperatures. I (integral) and D(derivative) are less important. For most cryogenic systems, I = 20 or 30 and D = 0 or 1 will suffice over the whole temperature range. The ideal P (gain) value depends on the cryogenic system and the temperature controller manufacturer. For more detailed information, consult the separately enclosed temperature control manual.

CRYO Industries of America, Inc.
11124 South Willow St. • Manchester, NH 03103
Tel: (603) 621-9957 • www.cryoindustries.com

Helium Gas Stream Temperature Control

For helium gas flow operation, all heaters can be turned off. This will provide the lowest temperature for the set flow rate (*the gas stream temperature also depends on the flow rate*).
Typical settings are:

All heaters 'OFF'
Flow rate set to '11'.

For higher temperatures, set the gas-stream (Channel B) 'setpoint' to the desired value; then, set the heater range to 'high', Select 25 Watts or 50 Watts for maximum power (current) output. Set the flow rate to 8 - 10 l/min. Based on gas laws (PV/T), a lower flow rate can provide the same pressure on the crystal at higher temperatures as the maximum flow rate at lowest temperatures.

To engage temperature control for the gas-stream (Channel B)
Press 'B'
Press 'SETPOINT'
Input value and press 'Enter'
Press 'B'
Press 'Heater Range'

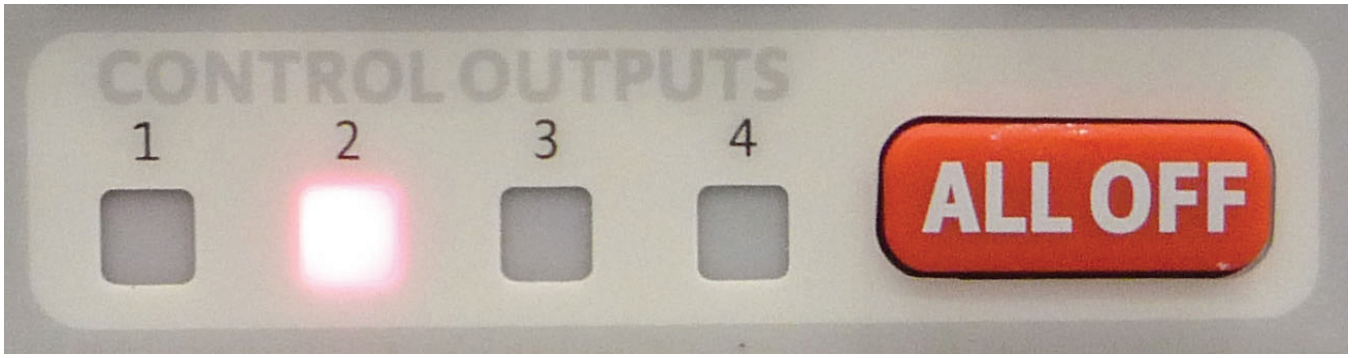

CRYO Industries of America, Inc.
11124 South Willow St. • Manchester, NH 03103
Tel: (603) 621-9957 • www.cryoindustries.com

Select 'Med' or 'High' using up/down arrow key, press 'Enter' when selection is highlighted
When 'Output 2' is activated, the indicator light will turn-on.
Usually, only the gas stream heater control is needed and all other heaters can remain off. If more heat is needed.

The second stage refrigerator heater is initially set to 5 K. After thermal equilibrium (stable temperature operation), this setpoint is optimized by slowly lowering the setpoint in small increments (0.05 - 0.1 k), that which provides the lowest base temperature.

If the 2nd stage setypoint is set too low, the helium flow will start to make liquid helium resulting in the He flow reducing or stopping.

Details on activating the refrigerator heaters can be found in the '**Nitrogen Gas Stream Temperature Control**'

Two heaters provide control when operating with helium gas

1. The main heater is located in the gas stream in the nozzle. The temperature controller will automatically adjust the gas stream temperature to match the controller's set point. When the lowest temperature is desired, this heater also should be set to 'OFF'.
2. The tip heater de-ices the nozzle as needed. The controller 'Relay 1' will close then the external tip temperature drops below the setpoint for channel D, typically 300 K

Additional Heaters:
The heater on the second stage of the refrigerator prevents the He gas from liquefing.
At high temperatures (>=300 K), assures single phase gas flow for higher temperature stability.
Optimized for lowest base temperature at 4.3 - 5 K. Set to 12 K for temperatures >= 300 K.

First stage heater (25 Ohms) is always OFF with helium gas.

At high temperature (>200 K), two preheat heaters can be used to reduce the temperature difference between the nozzle heat exchanger temperature and the exit gas. temperature. Using these heaters will increase the temperature stability at high temperature operation. These heater need not be controlled but simply biased with a fixed DC voltage.
Limit the maximum Power to pre-heaters to 19.5 V (15 W).

Nitrogen Gas Stream Temperature Control
The refrigerator used for this system is very powerful and can easily solidify nitrogen gas. (*Helium gas cannot be solidified*) To prevent nitrogen gas (N_2) from solidifying and plugging the gas flow system, both refrigerator heaters are activated ('Output 1' and 'Output 3')

'Output 1' provides up to 100 Watts into the 1st stage of the refrigerator.
'Output 3' provides up to 72 Watts into the 2nd stage of the refrigerator.

Note: Solidifying N_2 will not damage the system, as solid nitrogen does not expand. Temporarily turn of the refrigerator until the plug clears. This usually takes only a few minutes.

CRYO Industries of America, Inc.
11124 South Willow St. • Manchester, NH 03103
Tel: (603) 621-9957 • www.cryoindustries.com

→ **Refrigerator Monitor and Control**

Temperature sensors monitor the refrigerator temperature. In addition, heaters are installed on the two refrigerator stages, commonly referred to as 1st and 2nd stage. The 1st stage is the first and warmer cooling stage.

Channel C displays the temperature of the refrigerator 2nd stage. The temperature sensor is a silicon diode, model DT670B, curve 11.

Channel A displays the temperature of the refrigerator 1st stage. The temperature sensor is platinum RTD, pt100.

When using nitrogen gas, if the temperature of the refrigerator becomes too cold, it can liquefy or solidify the nitrogen gas. To avoid this, the 1st stage is initially set to 95 K and the second stage to 81 K. The optimum settings depend on the selected flow rate.

Output 1 - 1st refrigerator stage (nitrogen gas operation only)
Channel A displays the temperature of the 1st stage of the refrigerator.
'Output 1' controls the temperature of the refrigerator's 1st stage.

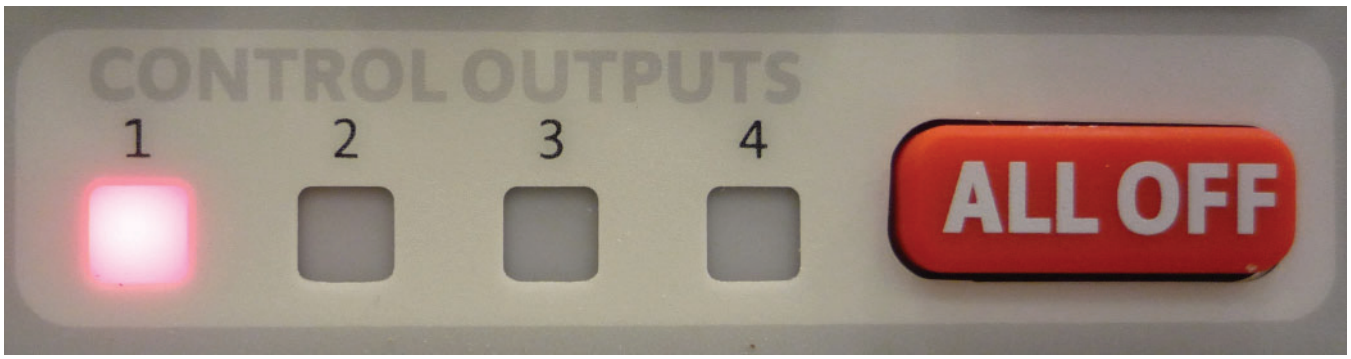

CRYO Industries of America, Inc.
11124 South Willow St. • Manchester, NH 03103
Tel: (603) 621-9957 • www.cryoindustries.com

A heater installed on the 1st stage heats the first stage. The heater resistance is 25 Ohms (2-50 Ohm heaters in parallel). Output 1 provides 100 W into 25 Ohms.

Set the refrigerator 1st stage (Channel A) 'setpoint' to the desired value = 95K; then, set the heater range to high. Set the maximum power output in the temperature controller to 100 Watts.

To engage temperature control for the refrigerator 1st stage (Channel A)
Press 'A'
Press 'SETPOINT'
Input value and press 'Enter' (Initial value 95 K)
Press 'A'
Press 'Heater Range'
Select ''High' using up/down arrow key, press 'Enter' when selection is highlighted
When 'Output 1' is activated, the indicator light will turn-on.

Output 3 - 2nd refrigerator stage

Channel C
Controls 2nd Refrigerator stage
Heater = 12.5 Ohms [2-25 Ohm heaters in parallel]
Powered by 30 V DC Power Supply Controlled by 'Output 3'

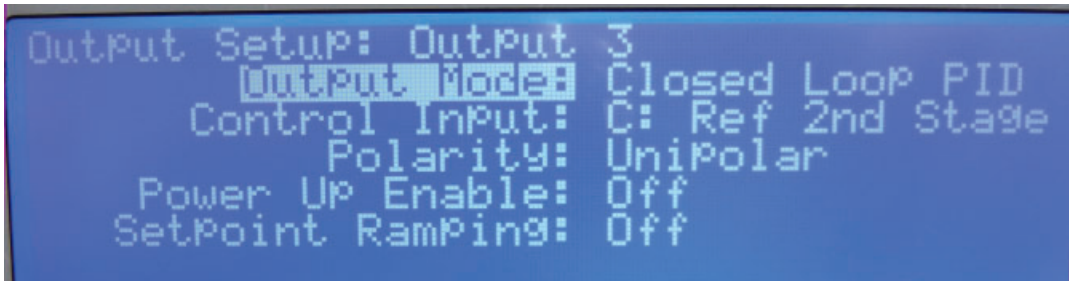

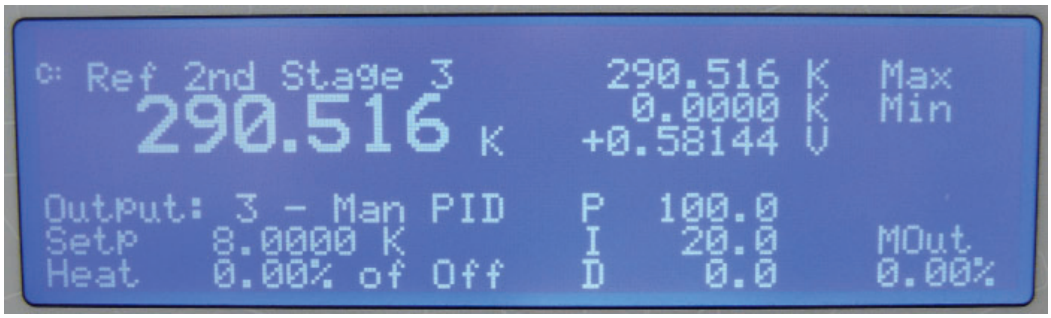

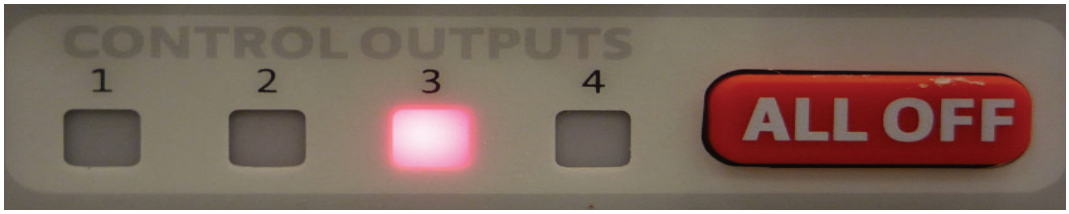

CRYO Industries of America, Inc.
11124 South Willow St. • Manchester, NH 03103
Tel: (603) 621-9957 • www.cryoindustries.com

Output 3 provides an analog output that signals the 30 V DC supply to heat the 2nd stage (Output power is controlled by the voltage setting with current setting to maximum.).
To engage temperature control for the refrigerator 2nd stage (Channel C)
Press 'C'
Press 'SETPOINT'
Input value and press 'Enter' (Initial value 82 K)
Press 'C'
Press 'Heater Range'
Select 'ON'

For nitrogen gas normal gas flow rates of 8 - 14 l/min are typical. Since the flow controller/meter is calibrated for helium gas, the actual nitrogen flow rate is less, being 5.5 - 8.3 l/min. The 1st stage 'Output 1' initial setpoint is 95 K. This can be easily adjusted later, if need be. The output power is set to High (100 Watts). The 1st stage heater resistance is 25 Ohms (2-50 Ohm heaters in parallel).

Nitrogen gas normal flow rate is between 8 – 14 N2 gas liters/min, typically 10 l/min.
(flow controller displayed readings)

The flow controller is calibrated for He; hence, the actual nitrogen gas value is the gas flow controller displayed value divided by 1.454.

If the refrigerator 2nd stage reaches below the Output 3 setpoint, the analog output signal (0 – 10 Volts) will turn on the current at the 30 V DC power supply. Set the power supply to 30V maximum output. If needed this can be reduced for finer control.

Setting up the main power supply as a 'slave' for automatic control of the 2nd stage temperature:
A. Set the power supply INT-SLAVE switch to "SER-SLAVE" position.
B. The "+" line of the control voltage source is connected to the "SER" input terminal and the "-" line of the control voltage source is connected to the power supply output "+" terminal.
C. The output voltage E0 calculates as per the following formula:
E0 = (Er x Ec) /10
where:
E0 = Output voltage of the power supply
Er = Maximum set voltage of the power supply
Ec = Remote control voltage
D. Connect the other end of the "+" line of the control voltage source to the "+" of the analog output terminal on the temperature controller. The left controller analog terminal is "+". (Consult the separate temperature controller manual for a diagram of the rear panel.)
E. Connect the main power supply "+" terminal to the "-"terminal of the analog output terminal on the temperature controller. (See the following figure and the separate main power supply manual for

CRYO Industries of America, Inc.
11124 South Willow St. • Manchester, NH 03103
Tel: (603) 621-9957 • www.cryoindustries.com

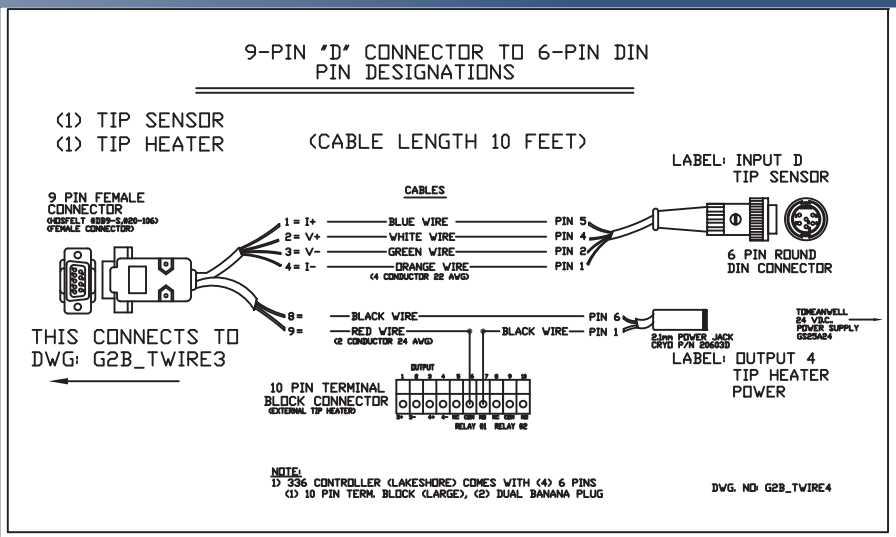

FOR G2B
CRYOCOOL
GAS STREAM

CRYO INDUSTRIES
STANDARD CABLE WIRING FOR 19 PIN TO CONTROLLER
FOR (2) SENSORS & (2) HEATERS

CABLE LENGTH 10 FEET

FOR G2B
CRYOCOOL
GAS STREAM

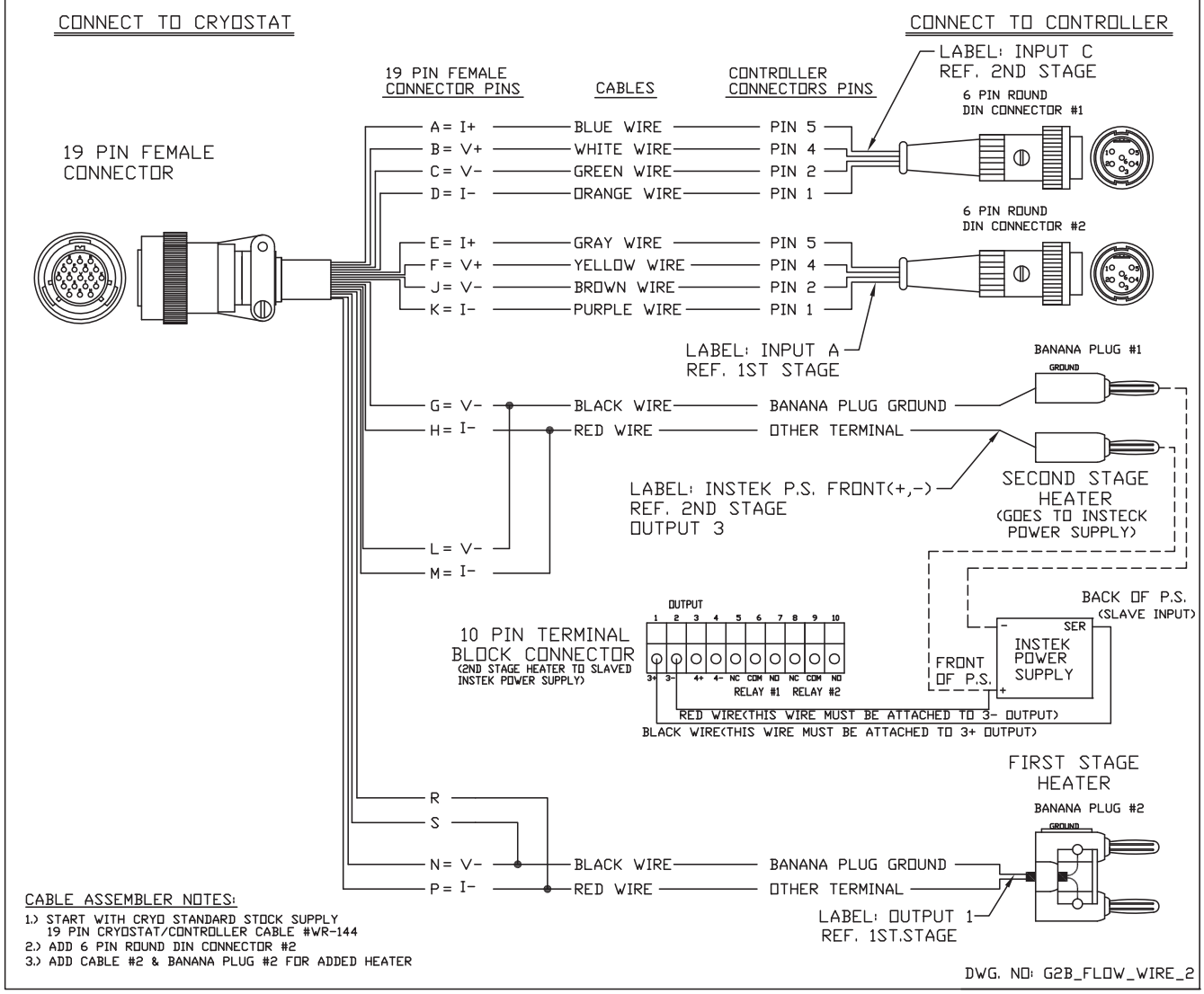

CRYO Industries of America, Inc.
11124 South Willow St. • Manchester, NH 03103
Tel: (603) 621-9957 • www.cryoindustries.com

Operation - Helium Gas

1. Make sure water is flowing properly
2. Set the initial flow rate to 11 - flow controller setting.
3. Check that relay 1 is set to Channel D at a setpoint of 300 K and activated.
4. Setpoint channed 'C' to initial value of 5.0 K. Turn heater to 'On'.
5. Set Output 3 power supply voltage control knob to mid scale and current output knob to max.
6. Turn on compressor.

Monitor the displayed temperatures for indication of cooling.
If water cooled compressor, check that water exit temperature is not hot.
Fine tune flow rate after cooldown for optimum performance.
After cooldown, set setpoint 'B', if an increase in temperature is desired.
For coldest temperature using helium gas, nozzle should point down.
If any ice forms on the external tip, increase the Channel D setpoint, for example from 300 K to 305 K.
For faster refrigerator cooldown, set the flow rate down during cooldown, increase afterwards.
Helium gas used should be ultra pure grade to prevent contaminants from condensing and plugging the flow line.
The helium supply should be equipped with a two stage regulator with 0 - 15 psig low pressure gauge and settings - initial setting 6 psig.

Operation - Nitrogen Gas

1. Make sure water is flowing properly
2. Set the initial flow rate to 9 - flow controller setting
3. Check that relay 1 is set to Channel D at a setpoint of 300 K and activated.
4. Activate Output 1 with setpoint = 95 K
Press 'A', select 'High' range
5. Activate Output 3 with setpoint = 82 K
Press 'C', set heater to 'ON'
6. Turn on compressor

Monitor the displayed temperatures for indication of cooling.
If water cooled compressor, check that water exit temperature is not hot.
Fine tune flow rate after cooldown for optimum performance.
After cooldown, set setpoint 'C', if an increase in temperature is desired.
If any ice forms on the external tip, increase the Channel D setpoint, for example from 300 K to 305 K.

CRYO Industries of America, Inc.
11124 South Willow St. • Manchester, NH 03103
Tel: (603) 621-9957 • www.cryoindustries.com

→ Additional Setup Notes

Preliminary:
a. If water cooled compressor, turn on water.
b. Check input voltage and compressor voltage are a match.
c. Turn on temperature controller - confirm all temperature sensors readout properly.
d. Check that all outputs (1-3) and relay 1 are connected and ready.
e. Make sure that the vacuum space of the cryostat system is sufficient. **Pump before cooling.**

Periodic pumping of this vacuum space is required.
If the outer vacuum tube of the cryostat feels 'cold to the touch' or terminal temperature increases, vacuum pumping may be required. Pumping with a high vacuum type pump is recommended. New cryostat systems require more pumping; as time passes outgassing is reduced and pumped away. In addition, the refrigerator will cryopump the vacuum when it gets cold.

→ Dry and Clean Gases

Make sure that the nitrogen and helium gases supplied to the cryostat are dry and free of contaminants. Contaminants can freeze and plug the flow system.
For helium gas, medical or high purity gas is recommended.

Gas cylinders should be equipped with two stage pressure regulators with 0 - 15 psig low pressure gauge and settings. In other word, the gas supply should be equipped with a two stage regulator with 0 - 15 psig low pressure gauge. Operating pressure is a nominal 4 - 9 psig.

Controller Setup for He or N2
Operation with He or N2 gas can be interchanged while operating. Simply input whichever gas is desired or change back and forth. For example, N2 gas can be used for temperatures above 78 K and He gas for lower temperatures.

Note that nitrogen gas will liquefy at temperatures below 78 K! Adjust the temperature controller setpoints to avoid liquid nitrogen if it is not desired.

Tip control via Relay 1 should be activated at all times for both helium gas and nitrogen gas; or, frost will form on the tip.

→ Nitrogen Gas Generator (OPTIONAL)
Arrange the gas generator and CRYOCOOL cryostat system in its operating place. The gas generator extracts nitrogen gas from compressed air.
There are two models of gas generators

1. Integral air compressor built-in.
2. Without air compressor.

CRYO Industries of America, Inc.
11124 South Willow St. • Manchester, NH 03103
Tel: (603) 621-9957 • www.cryoindustries.com

The supplied stainless steel flex hose connects the gas generator with the CRYOCOOL.

Connect the outlet nitrogen gas to the inlet of the flow meter. Connect the outlet of the flow meter to stainless steel flex hose and the other end to the gas inlet on the CRYOCOOL (NW16 [ISO-KF16] inlet flange).

For connection between the nitrogen gas generator and the inlet of the flow meter, red rubber hose is supplied. One end of the red hose has a 0.25 inch tube that fits the Swagelok fitting on the generator. The other end of the hose, has NW-16 for fitting to the inlet of the flow meter.

→ Cooldown Notes
Start nitrogen gas flow on.
Typical operational flow rate = 6 - 9 l/min.
Or
Start helium gas flow
Typical operational flow rate = 11 l/min (9.5 – 14 l/min), readout on flow meter
Note: flow meter is calibrated for He gas.

For faster cooldown, set the flow rate to approximately 5 – 6 l/min; then reset the flow rate to operational values when the gas stream temperature is less than 100 K.

During cooldown, the flow conductance through the transfer line may increase and the flow rate may try to increase as the resistance to gas flow reduces due to the colder temperatures. The flow controller will automatically re-adjust the flow to the set value.

To commence cooldown turn on the compressor.

Set Temperatures & Notes
It is important to learn how to be able to adjust the four temperatures, gas stream, external tip, refrigerator 1st stage and refrigerator 2nd stage when needed. If necessary, study the separate temperature controller manual.

For He gas operation, initially set the 2nd stage to 5 K wuth all additional heaters to OFF. For elevated temperatures, set the temperature of the gas stream desired and the refrigerator 2nd stage to 12K. However, some refrigerators are more powerful and will liquefy helium if no heat is applied to the second stage of the refrigerator. To avoid liquefication, first set the 2nd stage temperature to pause hold at 5 K. Then, slowly lower the temperature in small steps (0.05 K to 0.1 K steps) until the coldest temperature is reached without liquefaction occurring.

For N2 gas operation, prevent liquification by setting 1st and 2nd stage refrigerator temperatures high enough; typically, 1st stage = 90K to 95K, 2nd stage 79K to 85K.

External tip control must stay on at all times to keep the tip frost free.

CRYO Industries of America, Inc.
11124 South Willow St. • Manchester, NH 03103
Tel: (603) 621-9957 • www.cryoindustries.com

Typical PID settings for Output 2 (gas stream) are P = 50 to 100, I=20, D= 0 or 1.

At higher temperatures, the P (gain) value may need to be adjusted to get good temperature stability.

Check the rates of flow and re-adjust if necessary.

The controller will hold the gas stream at the setpoint temperature or Loop 2. Heater should be set to on and to high.

Make sure that the tip control is on.
If any ice ever forms on the tip, try increasing the Loop 2 setpoint higher, in 1 degree increments.
Under normal operation, no ice will form on the tip – no matter how humid the day.

The tip can be deiced by at any time by increasing the setpoint to 310 K; then, afterwards reset back to the normal setpoint temperature.

Colder could be better? If so, leave the nozzle (gas stream) heater OFF at all times and let the system temperature settle to equilibriums

Periodically, check the flow rate and fine tune if necessary.
Normal flow rate is between 8 – 14 He gas liters/min, typically 11 l/min
Normal flow rate is between 8 – 14 N2 gas liters/min, typically 9 l/min.
(flow controller displayed readings)

During subsequent cool downs, just turn the system on and immediately return to your temperature settings and flow rates.

It is important to note for which gas the flow meter is calibrated, He or N2. The supplied meter is calibrated for helium gas; hence the displayed value for helium gas is as displayed. For N2 gas, the actual gas flow rate is the displayed value divided by 1.454.

Operation Notes
Variable Temperature Operation
The gas flow temperature is controlled by supplying power to the control heater in the gas stream nozzle, via the temperature controller Output 2. The controller will automatically hold the setpoint temperature.

Typically, the gas flow rate is set constant and only the nozzle heater is used. The flow rate is not varied. It is more efficient and saves gas consumption to reduce the flow rate at higher temperatures where the sampe pressure can be maintained on the crystal with lower flow rate.

Higher flow rate generally will decrease the sample temperature and provide a stronger stream at l;owest temperatures (*until the refrigerator power handling capability is reached*). In other words, changing the flow rate will change the sample temperature.

The P (gain), I (Integral) and D (Derivative) are temperature control parameters that can be adjusted. For more information - see the separate supplied temperature controller manual.

CRYO Industries of America, Inc.
11124 South Willow St. • Manchester, NH 03103
Tel: (603) 621-9957 • www.cryoindustries.com

The controller can be set to automatically set the P, I, D parameters using the autotune mode. The factory setting is for refrigerator control via manual tuning. The manual mode will usually reach set temperatures faster. Typical manual settings are P=50 to 100, I=20, D=0 or 1. Generally, a higher P value is beneficial at higher temperatures. The gain (P) has the most affect on the control. Hence, fine tune control using gain (P) only.

Control the gas stream temperature.
When operating at the base (lowest) temperature, the nozzle (gas stream) heater (Output 2) should be set to OFF - nozzle heater is OFF, refrigerator 1st stage heater is OFF, setpint of the refrigerator 2nd stage is to the closest temperature to 4.2 K that prevents liquefaction that interferes with the flow rate and the tip heater is always ON..

To increase the temperature, select a temperature setpoint using the temperature controller (Output 2). The temperature controller will automatically increase the temperature of the gas stream to the selected setpoint and automatically maintain it.

The P (gain), I (Integral) and D (Derivative) are temperature control parameters that can be adjusted. The control type in the controller is set to manual 'PID' and typical settings are P= 10 to 100, I=20, D=0 or 1. The gain (P) has the most affect; fine tune using the gain (P) only.

Temperature fluctuating rapidly is one indication that the gain is too high. Very slow heater response to temperature change at the setpoint is an example of too low of a gain. The best P(gain) value may not be the same at different temperatures, for example different at 20 K than at 300 K.

Alternately, for additional temperature control, the second stage refrigerator temperature can also be set or adjusted.

Never set the gas stream temperature to exceed 325 K unless equipped with the 500 K option!

Operational Summary
To generate flow through the vacuum insulated transfer line, start a gas flow from the gas generator or supply. The vacuum insulated transfer delivers cold gas to the nozzle. A digital temperature controller controls the temperature of the gas stream. The controller also maintains the nozzle tip ice free.

A temperature sensor is installed inside the nozzle and located directly in the gas stream. The temperature of the gas stream can be set and held using the temperature controller. Also, a heater is installed on the outside of the nozzle (tip), to keep the tip ice free. A platinum temperature sensor is also installed on the nozzle tip.

If needed, the heater on the second stage of the refrigerator can be used to prevent helium liquefication. Initially, set the 2nd stage to 5 K; afterwards, lower in 0.1 K steps to the lowest temperature.

CRYO Industries of America, Inc.
11124 South Willow St. • Manchester, NH 03103
Tel: (603) 621-9957 • www.cryoindustries.com

Shutdown

a. Short-term: Turn off the compressor. If the compressor is water cooled, turn off the water. Maintain the normal nitrogen gas flow or reset the N_2 or He gas flow to a small purging amount ~ 2 l/min, until the system temperature return to near room temperature.

b. Long-term: Turn off the compressor. Wait until the internal nozzle temperature reaches 280 K before turning off the gas flow. Set the temperature controller heaters to off. Wait for the system to return to room temperature.

Turn the heaters to off.
Turn off all gas flows.
Turn off the temperature controllers.
Make sure the expanding cold gas can freely escape the system.

GENERAL NOTES

Following are some notes and precautions. .

Use only nitrogen or He gas for cold flow.

Do not touch the cold gas stream, which is extremely cold. Exposure to skin of the cold gas could result in a severe frostbite-like injury.

The dewar system has pressure relief protection installed. Do not remove pressure reliefs or check valves.

Make sure the nitrogen and He gas is properly vented from the room.

CRYO Industries of America, Inc.
11124 South Willow St. • Manchester, NH 03103
Tel: (603) 621-9957 • www.cryoindustries.com

Make sure a gas pressure relief/check valve is installed in the gas flow in circuit. This is necessary to prevent a build-up of pressure in the inlet side of the cryostat in the case where N_2 is solidified.

System Vacuum: The insulating vacuum of the system should be maintained by using a high vacuum pump.
Maintenance: The cryostat will need periodic pumping to maintain the vacuum. The system should be pumped with a two stage rotary or turbo pump (preferred). When the gas stream temperature is no longer cold enough, or moisture condenses on the outer surfaces during operation, or cooling of the outer vacuum shroud is observed, the cryostat will need to be pumped.

A cryostat has a vacuum space between the outer surface and the 'cold' internal temperatures. The transfer line is vacuum insulated. This vacuum is common to the cryostat. The integrity of the vacuum is the key to continued performance.

To pump the system:

1. The system should be returned to room temperature.
2. Attach the vacuum pump to the evacuation valve; fitting is NW25.
3. Evacuate the pumping line before opening the vacuum valve.
4. Cap the evacuation port when done.

Note: When using a turbo or diffusion high vacuum pump, the system can be re-evacuated while cold. Make sure that the technician pumping the system is experienced.

If helium liquefies, the flow may stop as the gas flow converts to liquid. Avoid liquification with the second stage heater; however, the second stage heater will not remove the liquid helium after it liquefies. After liquefication, the refrigerator should be shut off until the liquid is expelled.

FOLLOW STANDARD AND PROPER CRYOGENIC PROCEDURES. If you have any questions, we, at CRYO Industries, are only a phone call away and would be happy to answer any questions – (603) 621-9957,
Fax: (603) 621-9960
E-mail: cryo@cryoindustries.com.

Set Flow Control

Attach the gas supply to the inlet of the flow control. Apply gas to the inlet. Use the minimum pressure needed to maintain the flow rate. The flow controller is powered by it's supplied 12 volt power supply. Apply power and allow a 15-min warm-up time.

Adjust the setpoint to the desired value. The optimum pressure is the minimum required to maintain the flow setpoint. Adjust the setpoint by pressing the enter key [ENT] and then using the arrow keys on the Flow Controller front panel

CRYO Industries of America, Inc.
11124 South Willow St. • Manchester, NH 03103
Tel: (603) 621-9957 • www.cryoindustries.com

→ Beam Support Stand (OPTIONAL)
The rigid stand supplied will support the nozzle of the transfer line and allow accurate nozzle adjustment as needed. The stand is supplied with an x-y-z adjustment stage.

TECHNICAL STUFF (Some advanced information):

Temperature sensors are installed in a four-wire configuration:
Pin A - Sensor I+
Pin B - Sensor V+
Pin C - Sensor V-
Pin D - Sensor I-
The heater is attached to pins G-H.
Additional temperature sensors on the same connector (if installed) are wired as follows:
Pin E - Sensor I+
Pin F - Sensor V+
Pin J - Sensor V-
Pin K - Sensor I-

Platinum and silicon diode temperature sensors are actually two lead elements. Hence, each lead has two wires attached; I+ and V+ attached together onto one of the sensor leads and V- and I- attached to the other lead. With this wiring configuration, any lead resistance will be eliminated during the temperature measurement.

For more information on sensor wiring and detail operating instructions, for the temperature controller, read the separately supplied temperature controller manual.

System Vacuum
The system vacuum valve is located on your cryostat vacuum shroud. The interface is a standard ISO-KF25 (NW25) flange.

The refrigerator is powerful enough to liquefy or solidify nitrogen if the flow rate is too low or the refrigerator heaters are not on.

The temperature controller has built in computer interface, ramp control and many other features, which are explained in the separate temperature controller manual.

Wiring information is enclosed on the Documents CD.

CRYO Industries of America, Inc.
11124 South Willow St. • Manchester, NH 03103
Tel: (603) 621-9957 • www.cryoindustries.com

LN2 generation* (Advanced Information)

Several times throughout this manual 'how to avoid nitrogen liquefaction using control heaters' is addressed. For gas stream cooling with nitrogen gas, avoiding liquification is beneficial and provides a pure single phase gas stream at the outlet. However, liquid nitrogen generation can be an alternate goal. If liquid nitrogen generation is of interest, read on.

This cryostat system will easily and simple generate in excess of 30 liters/day of liquid nitrogen. Operation is simple and automatic!

1. Input sufficient nitrogen gas
2. Turn all heaters off
3. Place nozzle in collection dewar.
4. Liquid nitrogen will fill the collection dewar.

CRYO Industries of America, Inc.
11124 South Willow St. • Manchester, NH 03103
Tel: (603) 621-9957 • www.cryoindustries.com